Detector
Vertical Type (13.3x8.2x13.4mm)

Water-proof | Dust-proof | LEAD FREE | RoHS Compliant

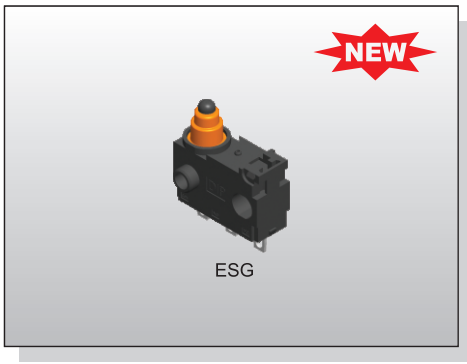

FEATURES
※PC board terminals option
※Solder terminals option with wire
※IP67 dust and water resistance
※With Resistors option

APPLICATION
※White goods
※Automotive
※Motorcycle

SPECIFICATION

Contact Rating	1mA, 5V DC 0.1A, 30V DC
Contact Resistance	1Ω max.
Insulation Resistance	100MΩ min.
Dielectric Strength	600V AC/1 minute
Operating Force	153gf max.
Operating Position	NC OP 8.7±0.3mm
	NO OP 8.4±0.3mm
Operating Life	10mA, 14V DC 500,000 cycles
	0.1A, 30V DC 200,000 cycles
Operating Temp.	-40°C ~ +85°C
Storage Temp.	-40°C ~ +85°C

HOW TO ORDER

E S G - □ □ □ □ □ □ □

- Cover Type: 1=M3 Screw Mounting
- Rating: G=1mA 5V DC~ 0.1A 30 VDC Contact Silver Plated
- Actuator: 0=Pin Plunger 2=Hinge lever 14mm
- Contact Form: 1=SPDT 2=Normal Close 3=Normal Open
- Terminal Type: 1=PCB Terminal Type 2=Lead Terminal Type
- V=Lead Free
- Cable Type

CIRCUIT

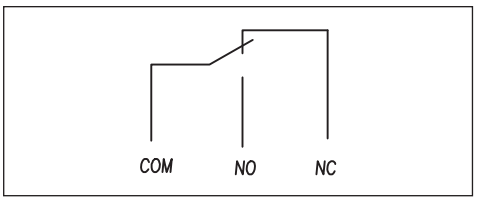

PACKAGE
<Bag>
400 pcs
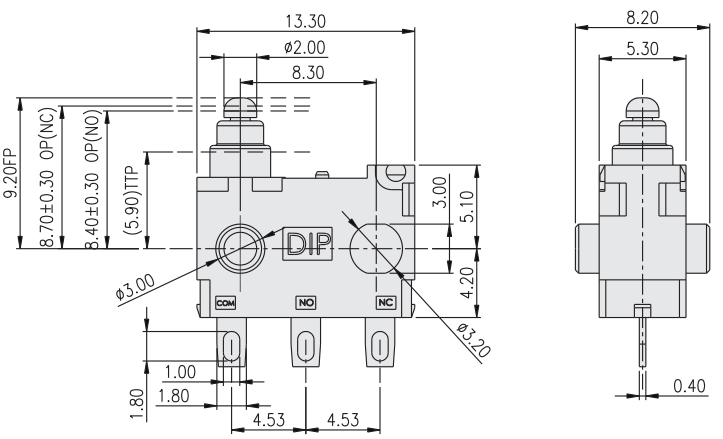
ESG